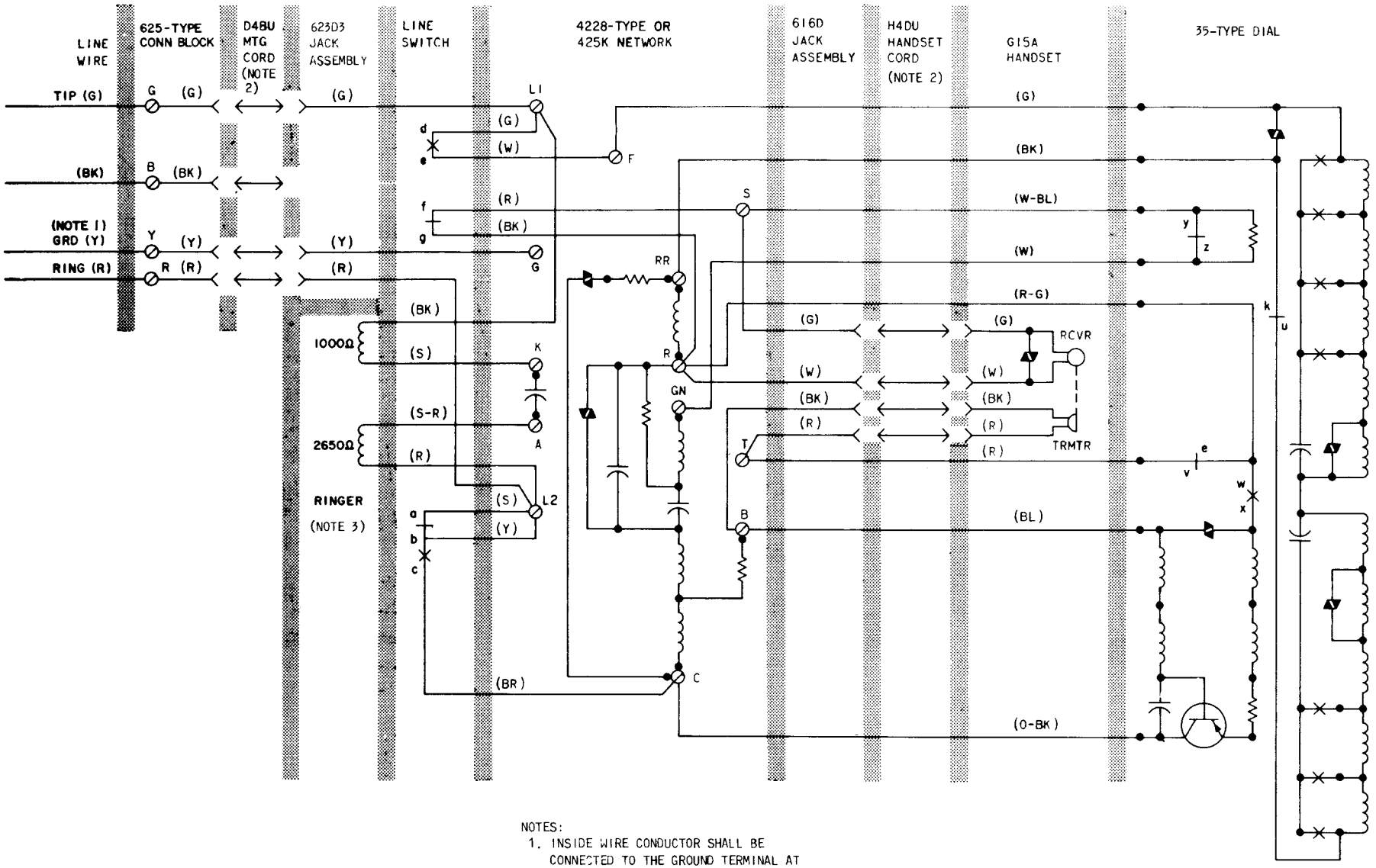

NOTES:
1. INSIDE WIRE CONDUCTOR SHALL BE CONNECTED TO THE GROUND TERMINAL AT THE PROTECTOR OR EQUIVALENT ONLY IF REQUIRED FOR SERVICE BEING INSTALLED.
2. H4DU AND D4BU CORDS MUST BE ORDERED SEPARATELY.
3. SET IS FACTORY WIRED FOR BRIDGED RINGING.

2500DM Telephone Set, Connections