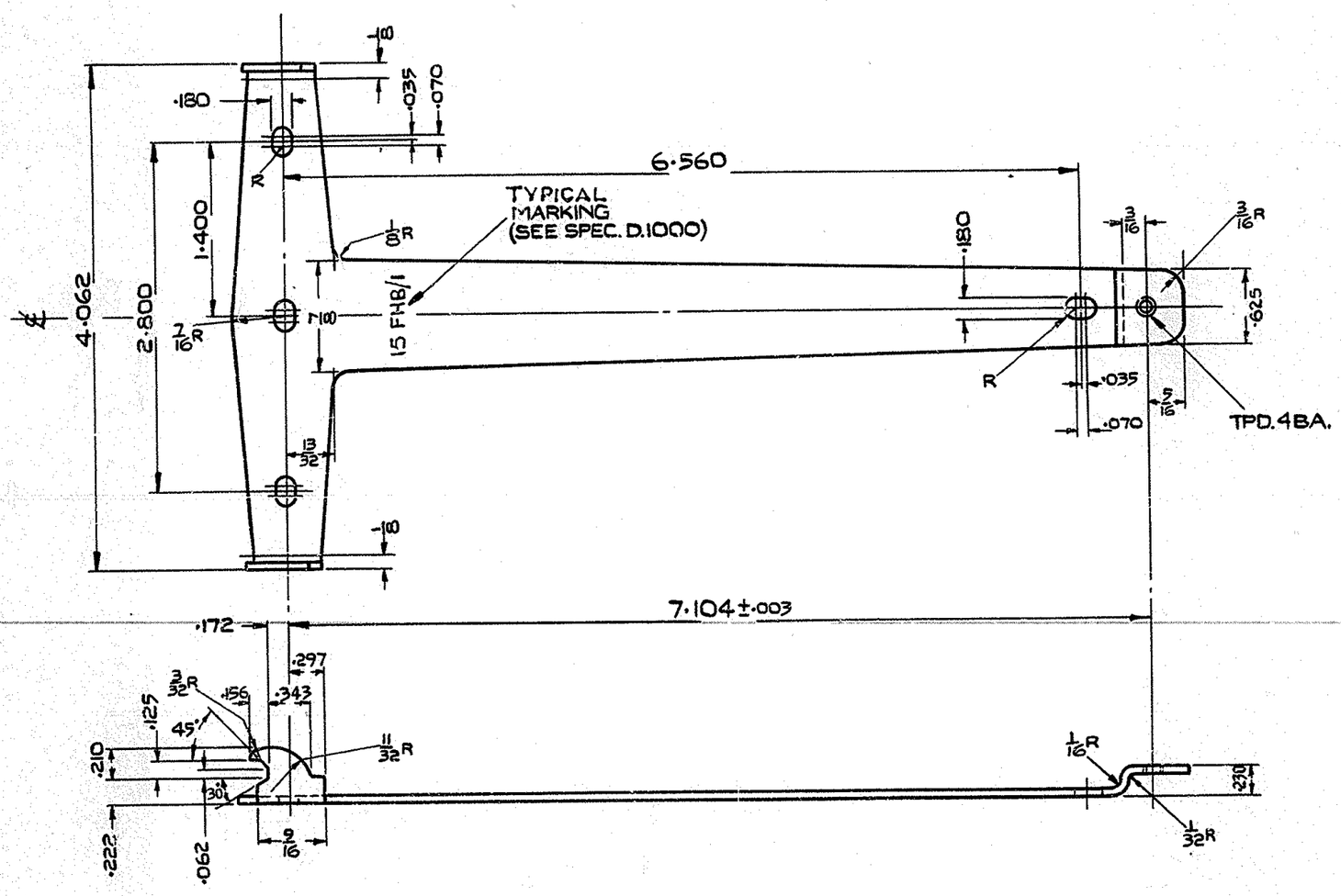

MATERIAL :-STEEL, EN2B, SPEC. BS.1449, 16 S.W.G. (·064)

FINISH :-ZN. P. & GLOSSY BLACK STOVE ENAMEL.

FOR USE WITH :-TELEPHONE No. 711L (COLOUR) (DRG. 91796)

(C)

DRG. 97321

DIMENSIONS IN INCHES

TRIM TO THESE LINES 15" x 16"

P.O.	DISTRIBUTION GENERAL	
REFERENCES		
		SPEC. D1000
		" BS.1449
ASSEMBLY DRG.		WIRING DGM
FILE	B.T.T.D.C. TECH.GEN.6	SPEC.
SCALE :- 1/1 AND AS INDICATED		3RD ANGLE PROJECTION
DECIMAL DIMENSIONS NOT TOLERANCED SUBJECT TO		
APP'D. IN S1 SECTION	DRN / TCD. G.E.C.	
	CKD CONTRS &	
	DATE 5·10·64	

AMENDMENT	SUFFIX
/0 ADDED, & MADE MARK 1, SUPERSESSION NOTE ADDED 30.8.67	A

SUPERSEDED FOR NEW WORK BY DRG. 91808/1

BRACKET, TELEPHONE No. 15

(MARK 1)

DRG. 91808/0

1316. 82206. E.T. 10/59

/D.O.

17
032